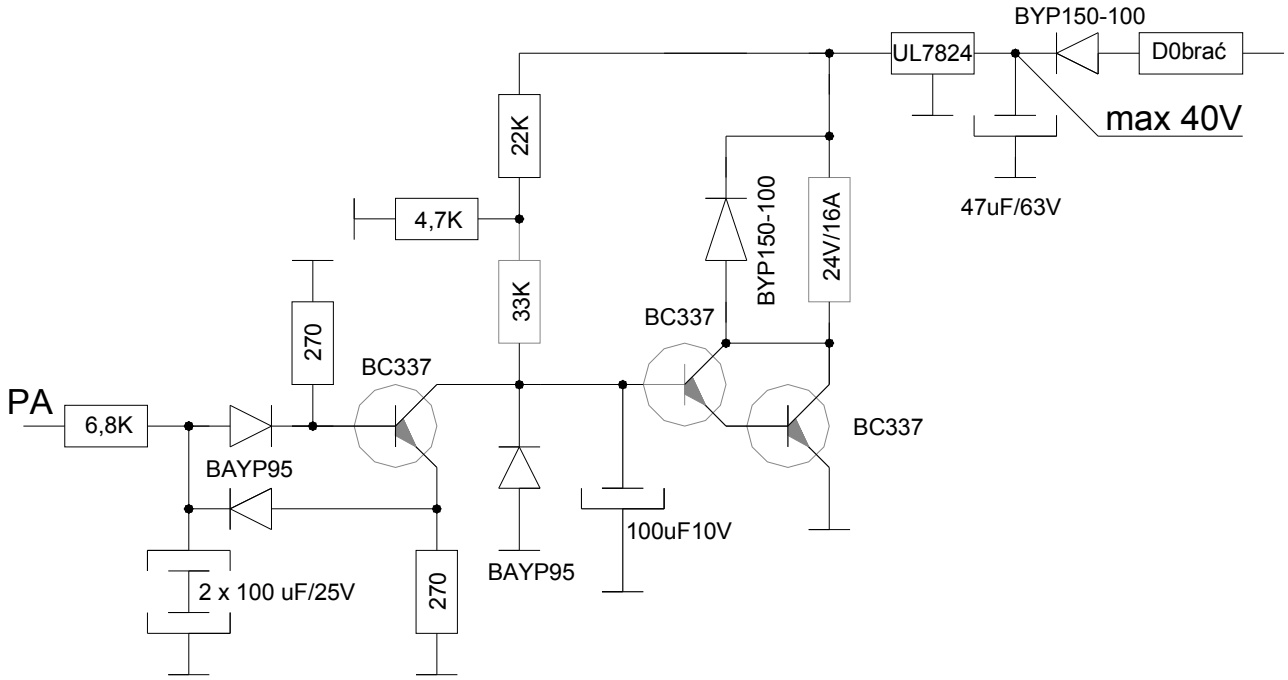
BYP150-100
UL7824
D0brać
max 40V
47uF/63V
22K
4,7K
33K
BYP150-100
24V/16A
BC337
270
BC337
PA
6,8K
BAYP95
BC337
BAYP95
100uF10V
2 x 100 uF/25V
270